ROTATOR FR 7C-X24A24

FINN ROTOR

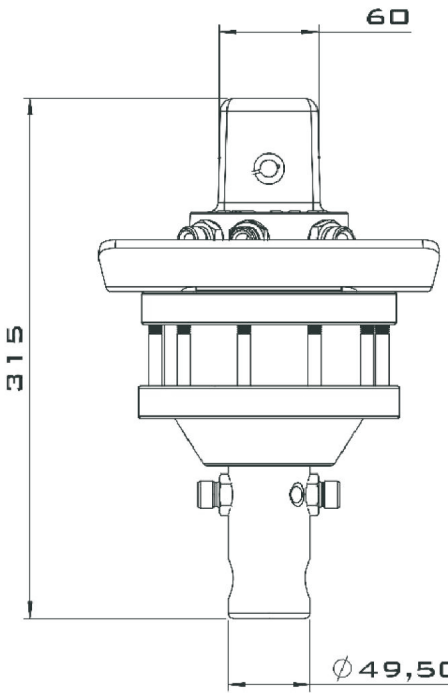

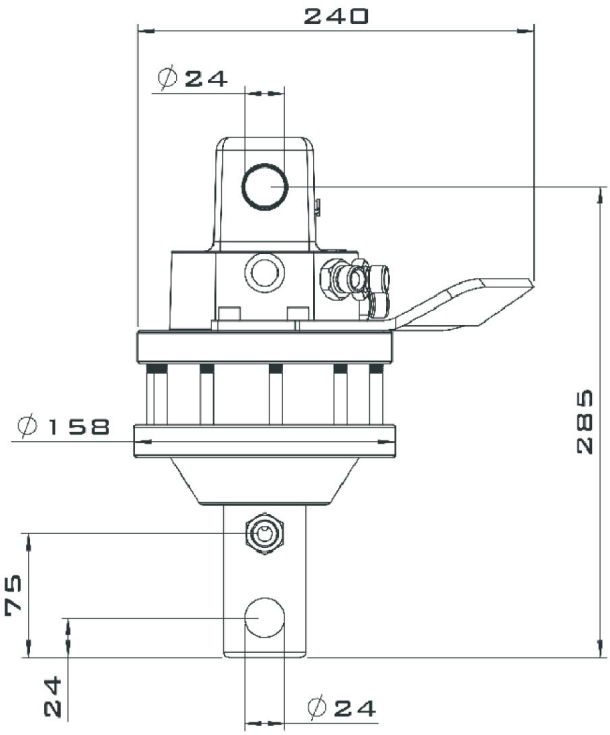

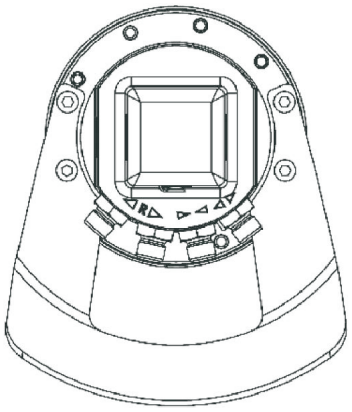

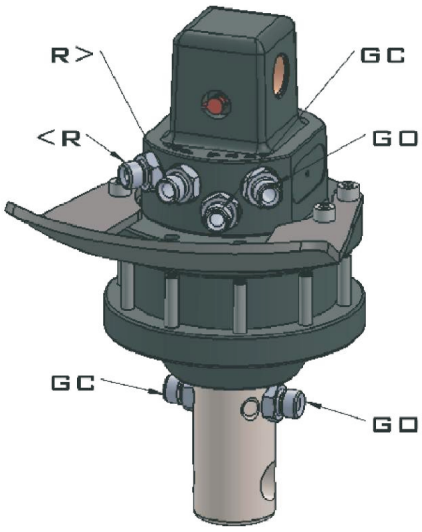

Rotation angle	Unlimited	
Max pressure (R) [bar/psi]	250	3625
Max pressure (GO) [bar/psi]	200	2900
Max pressure (GC) [bar/psi]	300	4350
Displacement [cm^3/in^3]	330	19,8
Torque [Nm/lbf·ft]	900	664
Max axial load static [kN/lbf]	30	6744
Max axial load dynamic [kN/lbf]	15	3372
Weight [kg/lb]	16	37,4
Connections	G3/8”	G3/8”
Req. oil flow [lpm/gpm]	20	5,284

Finn-Rotor OY
www.finn-rotor.ru

ТЕЛ: +7 (499) 755-61-34
e-mail: info@finn-rotor.ru